2021
ANNUAL
FACETING
COMPETITION

CONDITIONS
DIAGRAMS &
ENTRY FORM

Version 2 Dated 6/10/20

QUALITY GEM ROUGH SUPPLIES

Glenn Huntley

FINEST QUALITY FACETING ROUGH IN BOTH NATURAL AND SYNTHETIC MATERIAL

Faceted Stones

Opal Rough

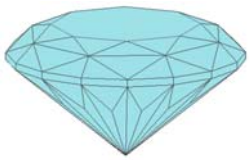

Freeform and Calibrated Shapes

Cabochons Calibrated and Freeform

FACETING ROUGH CONTACT US FOR PRICES

MASTERCARD, VISA AND AMEX ACCEPTED

PO Box 3841 Marsfield NSW 2122
Phone: 02 9888 1261 Mobile: 0427 945 087
EMAIL: qualitygemrough@gmail.com
See you at many of the lapidary and gem shows around Australia

Keith Pittaway Memorial Trophy

Proudly sponsored by Ian Pittaway

Ian Pittaway continued sponsoring this trophy in memory of his father. He wrote the following.

Keith's interest in rocks and gemstones intensified with the formation of the Port Hacking Lapidary Club in 1972.

Within 5 years he had turned his hobby into a business, acquiring Embel Lapidary in Punchbowl NSW.

Embel made an entry level faceting machine, selling at a price point less than the Gemmasta and Ultratech machines.

Besides providing advice on all things lapidary, Keith continued the manufacturing of the Embel faceting machine and conducted weekly faceting classes for up to 8 students.

In the 1980's Keith was an active member of the AFG Sydney branch, including time as NSW State Director.

His passion for encouraging faceting "beginners" saw Keith sponsoring the annual Novice Champion Trophy, until his death in 1994.

Jim Goldacre Trophy

Proudly sponsored by AFG Perth Group

Jim joined the AFG Perth Group late 1997. His interest in faceting led him to be an instructor, a Judge and the W.A. State Director (2001 until his death). He encouraged members to enter Guild Competitions as a means to not only improve their skills but also receive feedback on their cutting via the Judge's comments.

Over a period of time Jim realised that people found it daunting entering the Annual competition for the first time. He decided that an incentive was needed to encourage members and he put forward this idea of a trophy to our members for discussion and approval.

Jim passed away in 2006 while conducting a judging course but his idea of a sponsored trophy for the runner up in the Novice Section came to fruition. In honour of Jim's contribution to our members, the Guild and his ideal of encouraging novices to "have a go" in competitions, the AFG Perth Group unanimously agreed that the Trophy be named as "The Jim Goldacre Trophy" and the annual sponsorship continues to this day.

Open Challenge Trophy Gemstone Faceting Designs

Proudly sponsored by Andrew Brown

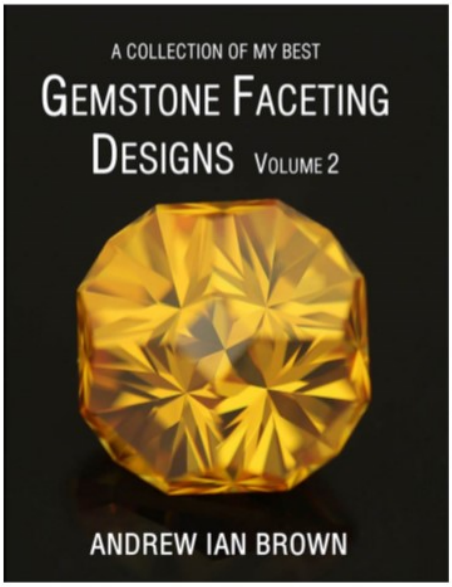

Andrew is a keen facetor from Tasmania. His book can be purchased from

https://facetingdesigns.com/books/

2021 AUSTRALIAN FACETORS' GUILD COMPETITION

CONDITIONS, TROPHIES, DIAGRAMS & ENTRY FORM

CONDITIONS OF ENTRY:

1. Unless otherwise stated in these Conditions, this competition is staged for competitors in accordance with the Competition & Judging Manual No. 8, issued April 2015 by the Australian Federation of Lapidary & Allied Crafts Association (AFLACA).

2. This is a Level 3 competition as defined in the AFLACA Judging & Rules Manual on page 6. Copies of the Manual are available from the AFG Supplies Officer, whose address is shown on the supplies order form in Facet Talk.

3. This competition is conducted in three Divisions **– NOVICE, INTERMEDIATE & OPEN:**
NOVICE DIVISION entrants should carefully read Rule B4.2 on page 6 of the Manual.
INTERMEDIATE DIVISION entrants should carefully read Rule B4.3 on page 7 of the Manual**.**
OPEN DIVISION entrants should carefully read Rule B4.4 on page 7 of the Manual & SPECIAL CONDITIONS below.

4. Section numbers used in this competition reflect the numbers in the AFLACA Manual; e.g. In Section N.8A.1, N = Novice Division, 8A is Standard Round Brilliant with Continuous Girdle, as defined on page 44 of the Manual, 1 means the first section in Novice Division.

5. Competitors are permitted only one entry in each Section for which they are eligible.

6. **There are NO ENTRY OR RETURN POSTAGE FEES for this competition.**

7. The Competition Committee reserves the right to change the competition Division or Section of entries where it is deemed appropriate under the rules governing this competition. Competitors are urged to consult the AFLACA Manual and this Schedule before completing the official Entry Form in this Schedule.

8. Boxes containing entries must be clearly marked with the Section number in this Schedule, and with the name and colour of the gem material. The abbreviation MM is acceptable for man-made synthetic material. **The entrant's name must NOT appear on the box, but MUST be enclosed separately for identification purposes.**

9. **Competitors are totally responsible for postage & insurance for their entries. (See clause 6.)**
All entries to be return posted will be by registered post.
Overseas entrants should note: (1) Packages should be labelled "**Lapidary Competition Entries to be returned to sender",** with no reference to gemstones. (2) To minimize possible difficulties with Australian Customs, it is recommended that a copy of the competition entry form be included with the stones and only **nominal value** be placed on the customs declaration form which must be fixed to the package.

10. Where **Coloured** material is specified, it must be **obviously coloured in the cut stone**. Colour variations are not to be too wide from indicated colour.

11. Except for 'Specified Size Sections' & 'Minimum Size' the minimum size in all other Sections is 6mm on shortest axis of outline shape when viewed from above. Stones up to and including 0.1mm below minimum size, as measured by the Judge, will be eligible. Stones which are more than 0.1mm below minimum size will be ineligible. Minimum size does not apply to 'Specified Size' sections. See also Item H on page 4.

12. Entries, with official Entry Form must be received no later than **1/06/2021** to **Competition Co-ordinator** at **P.O. Box 462 Wentworthville NSW 2145 Australia** We recommend Australian entries be mailed no later than **14/05/2021**.
ALL inquires must only be made via the official e-mail: annualcomp@facetorsguild.com.au
We recommend Overseas entries be mailed no later than 01/05/21
Entrants wanting confirmation of receipt of entries MUST enclose a stamped, self-addressed envelope with entries, or nominate an e-mail address on the entry form.

13. All entries will be displayed and results announced at the AFG Annual Seminar held in September 2021.

14. Judging sheets may be collected at noon on the Saturday of the Seminar.

15. Entries, medallions and keeper trophies will be available for collection from 2.00pm on the Sunday of the Seminar. Entries and awards not being collected at the Seminar will be mailed to entrants by 31/10/2021.

SPECIAL CONDITIONS:

A All chosen designs have either been previously used in competitions or are known to have been successfully cut using instructions given. Please note the following:

B Angles are not judged and competitors may vary those supplied in this Schedule **PROVIDED** this does not change meet points or facet index. Entrants may vary cutting sequence if desired.

C All designs must be cut according to the diagram, i.e. the facet position, basic shape, direction of any spiral effect and meet points must conform to the diagram. However facet sizes may be altered slightly if necessary to achieve meet points.

D ALL facets are flat, except in Section I.8A.1 Girdle & O.10.6 Concave Facets. Any other entry with concave or curved facets will be disqualified.

E **Section O.10.6** Concave facets will be judged for evenness of curvature, uniformity, polish and meetpoints. Mandrel size is at cutters choice to achieve meetpoints and concave facet shape.

F **Girdle Thickness:** A Girdle which, at its narrowest point, is more than 5% of the total height of the stone from the Culet to the Table/Apex, ***as measured by the Judge with a Graticule Loupe***, will lose all points for this feature.

G **Specified Size:** For every 0.1mm or part thereof away from Specified Size, as measured across the shortest axis of outline shape, 1 point will be deducted from the maximum for this feature. **However,** a total tolerance of up to and including 0.1mm above or below Specified Size, as measured by the Judge, will be allowed before any points deduction.

H **Minimum Size:** Shall be as indicated on the Schedule on page 6 and on all diagrams

I Entrants should only enter in the Division and Sections they are eligible for; Novice, Intermediate or Open. If an entrant has never won a 1st place in a Level 3 or 4 Competition they should start off in Novice and progress through as they gain experience to the higher Divisions when a 1st place is attained.

J **Sections O.10.5 and O.10.6** are optional and will not count towards aggregate scores.

K **Section N.9A.2 L/W** to be judged at 1.25.

L **Section O.10.5 – Open Challenge**: This section is designed to test a wider range of skills than usual. The following special conditions apply.

(a) Competitors must submit their fully rendered faceting diagram for assessment as part of their entry.

(b) All points will be lost for the diagram if the competitors name or any means of identifying the competitor appears on the cutting diagram, **including the computer file data at the footer.**

(c) The stone will be judged using the Judging Sheet O.10.5 (a) illustrated on page 20.

(d) The Diagram will be judged using the judging features on Judging Sheet O.10.5 (b) on page 21.

(e) Entrants have the freedom to choose cutting angles and indices to achieve the given 4 views. Variations caused by tangent ratio adjustments to optimize the design are acceptable.

(f) The points scored on the Judging Sheet (b) will amount to a possible 10% of the total score for the stone.

(g) At least 2 members of the Competition Committee will judge the cutting diagram and the results will be averaged to produce this score.

M Judging Sheets will be used as per sample on page 24.

TROPHY SECTIONS & CONDITIONS:

a. **Open Champion - Quality Gem Rough Trophy –** Keeper donated by **Glenn Huntley:**
Entrant with the highest aggregate points score in Open Sections 1, 2, 3 & 4.

b. **Open Runner - up – Bob Chipperfield Trophy - Second** to a. above. Keeper donated by AFG

c. **Intermediate Champion – Tony Annear Trophy – Keeper** provided by AFG
Entrant with highest aggregate points score in Intermediate Sections 1, 2, 3 & 4.

d. **Intermediate Runner - up – Ray and Ruth Grandcourt Trophy -** Second to c. above.
Keeper donated by AFG.

e. **Novice Champion Facetor – Keith Pittaway Memorial Trophy –** Keeper donated by Ian Pittaway.
Entrant with the highest aggregate points score for the best entries in Novice sections 1, 2, 3, and 4.

f. **Novice Runner - up – Jim Goldacre Trophy** - Second to e. above. Keeper donated by Perth AFG Group.

g. **Champion State – Peter Collins Trophy –** (No Keeper): Aggregate of 2 Highest scores per State/Territory in each of Novice, Intermediate & Open Divisions, with a minimum of 3 entrants from a State or Territory contributing to the aggregate.

h. **Highest Scoring Entry –** Gold Medallion: Highest scoring entry in any Section or Division.

i. The selection/presentation of the above trophies is subject to the approval being obtained/given by each donor prior to the competition.

j. Gold, Silver and Bronze medallions will be awarded to the Winner, Second and Third place getter in each section. Special Award for Sections O.10.5 & O.10.6

2021 AUSTRALIAN FACETORS' GUILD COMPETITION SCHEDULE

NOTE: this schedule includes diagrams of all cuts nominated in the Sections below

NOVICE	INTERMEDIATE	OPEN
Section N.8B.1 *STD CUT* **STANDARD ROUND BRILLIANT with FACETED GIRDLE** **ANY COLOURED TOPAZ**	**Section I.8A.1 *STD CUT*** **STANDARD ROUND BRILLIANT with CONTINUOUS GIRDLE** **SPECIFIED SIZE 8.0mm** **COLOURLESS TOPAZ**	**Section O.10.1 *MODIFIED STD CUT*** **QUADRION** **SPECIFIED SIZE 10.0mm** **ANY COLOURED SYNTHETIC CORUNDUM**
Section N.9A.2 *STD CUT* **STANDARD OBLONG STEP CUT with CUT CORNERS L/W 1.25** **ANY COLOURED NATURAL QUARTZ**	**Section I.10.2 *MODIFIED STD CUT*** **KANGAROO CULET VARIATION** **MINIMUM SIZE 8.0mm** **COLOURLESS QUARTZ**	**Section O.10.2 *MODIFIED STD CUT*** **SUPERFLASH #1** **COLOURLESS QUARTZ**
Section N.10.3 *MODIFIED STD CUT* **SUPERIMPOSITION R** **MINIMUM SIZE 8.0mm** **ANY COLOURED SYNTHETIC CORUNDUM**	**Section I.10.3 *MODIFIED STD CUT*** **SYDNEY SPARKLER** **MINIMUM SIZE 8.0mm** **YELLOW CUBIC ZIRCONIA**	**Section O.10.3 *MODIFIED STD CUT*** **TWINKLE TRIANGLE** **COLOURLESS CUBIC ZIRCONIA**
Section N.11.4 *FANCY CUT* **DILEMMA SORTED VARIATION** **MINIMUM SIZE 8.0mm** **ANY COLOURED NATURAL QUARTZ**	**Section I.11.4 *FANCY CUT*** **APEX CROWN VARIATION** **MINIMUM SIZE 8.0mm** **ANY COLOURED CUBIC ZIRCONIA**	**Section O.11.4 FANCY CUT** **TRIAPEX** **MINIMUM SIZE 8.0mm** **ANY COLOURED SYNTHETIC SPINEL**
		Section O.10.5 *OPEN CHALLENGE* ***OPTIONAL*** **MINIMUM SIZE 10.0mm across Longest Axis** **ANY MATERIAL, ANY COLOUR**
		Section O.10.6 *CONCAVE CUT* ***OPTIONAL*** **HAPPY BIRTHDAY CONCAVE VARIATION** **Minimum Size 10.0mm** **ANY COLOURED CUBIC ZIRCONIA** ***REFER NOTES ON DIAGRAM & SPECIAL CONDITIONS***

Full size copies of this Schedule, complete with diagrams of all cuts, are available from the AFG Website: www.facetorsguild.com.au

2021 AFG FACETING COMPETITION

ENTRY FORM

NAME: Miss, Mrs., Ms., Mr. …… **JUNIOR:** YES/NO

ADDRESS: …… (Under 16 years at 1/09/21)

…… **STATE** …….. **POSTCODE** …… **PHONE** ……

E-mail ADDRESS: ……

NOVICE		INTERMEDIATE		OPEN	
Material	**Colour**	**Material**	**Colour**	**Material**	**Colour**
Section N.8B.1		**Section I.8A.1**		**Section O.10.1**	
Section N.9A.2		**Section I.10.2**		**Section O.10.2**	
Section N.10.3		**Section I.10.3**		**Section O.10.3**	
Section N.11.4		**Section I.11.4**		**Section O.11.4**	
				Section O.10.5	
				Section O.10.6	

Notes for Entrants:
1. Decide which Sections you are going to enter.
2. Write **Name of Material & Colour** in appropriate space for each Section entered.
3. Fill in the section below and send this form with your Entries to:

Competition Committee: P.O. Box 462, Wentworthville NSW Australia, 2145.

To arrive not later than 1st June 2021

For International Entrants only, please contact coordinator for alternate mailing address

annualcomp@facetorsguild.com.au

My entries will be collected at the Seminar. ☐

My entries are to be returned to the address above. ☐

I declare that my entries are all my own work, and have not previously won a first prize in any competition at the same Level or Division.

Entrants Signature …….. Date……. /……. /…….

Official Use Only:

Entry Form & Entries Received: ……..

Entries Checked ……..

1 2 3 4 5 6

2021 AUSTRALIAN FACETORS' GUILD LIMITED ANNUAL FACETING COMPETITION
Section N.8B.1 Standard Round Brilliant with Faceted Girdle
Material - Any Coloured Topaz
73 Facets: 57 + 16; Meets: 57 (25 Pavilion + 32 Crown)

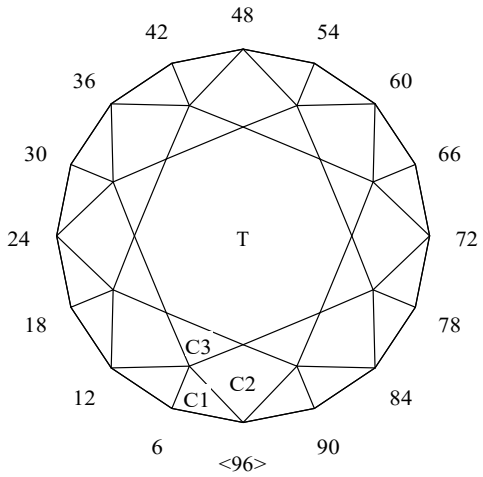

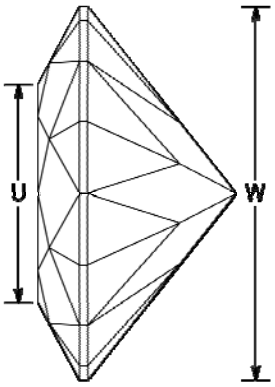

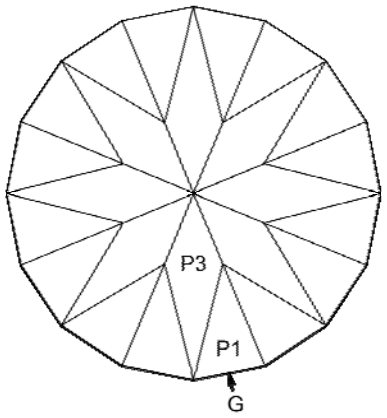

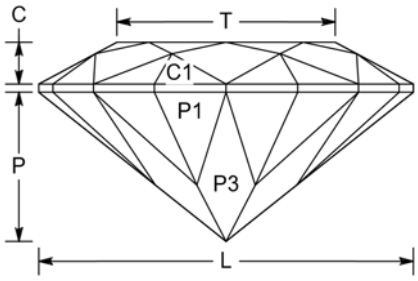

Std. Round Brilliant with Faceted Girdle
Angles for R.I. = 1.610
57 + 16 girdles = 73 facets
8-fold, mirror-image symmetry
96 index
L/W = 1.000 T/W = 0.583 U/W = 0.583
P/W = 0.396 C/W = 0.111
Vol. /W³ = 0.178

PAVILION

P1	43.00°	03-09-15-21-27-33-39-45-51-57-63-69-75-81-87-93	Form TCP
G	90.00°	03-09-15-21-27-33-39-45-51-57-63-69-75-81-87-93	Set size
P3	41.00°	96-12-24-36-48-60-72-84	Meet P1,G form PCP

CROWN

C1	36.00°	03-09-15-21-27-33-39-45-51-57-63-69-75-81-87-93	Set girdle thickness
C2	30.00°	96-12-24-36-48-60-72-84	Meet C1, G
C3	17.00°	06-18-30-42-54-66-78-90	Meet C1,C2
T	0.00°	Table	Meet C2,C3

2021 AUSTRALIAN FACETORS' GUILD LIMITED ANNUAL FACETING COMPETITION
Section N.9A.2 Oblong Step Cut with Cut Corners L/W 1.25
Material - Any Coloured Natural Quartz
53 Facets: 45 + 8; Meets: 44 (20 Pavilion + 24 Crown)

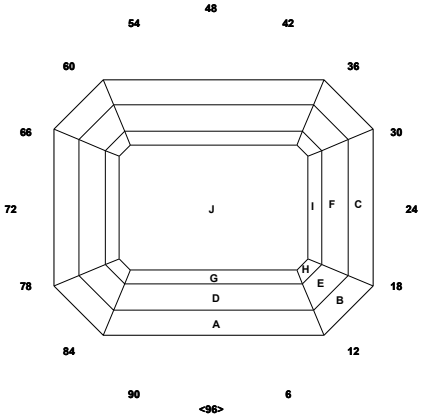

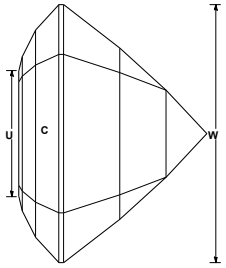

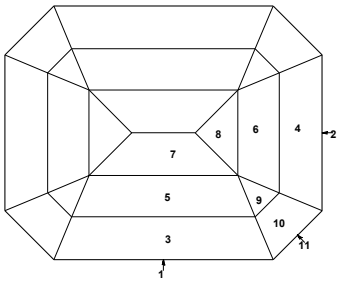

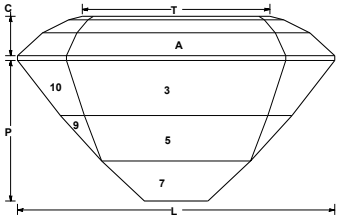

Std. Oblong Step Cut with Cut Corners

Angles for R.I. = 1.540
45 + 8 girdles = 53 facets
2-fold, mirror-image symmetry
96 index
L/W = 1.250 T/W = 0.739 U/W = 0.489
P/W = 0.554 C/W = 0.152
Vol. /W³ = 0.417

PAVILION			
1	90.00°	96-48	Set Width
2	90.00°	24-72	Set Length
3	52.00°	96-48	Locate girdle
4	52.00°	24-72	Level girdle, meet 1-2-3
5	48.00°	96-48	Cut as required
6	48.00°	24-72	Meet 3-4-5
7	43.00°	96-48	Cut as required
8	43.00°	24-72	Meet 5-6-7
9	48.00°	12-36-60-84	Cut corners, meet 5-6-7-8
10	52.00°	12-36-60-84	Meet 3-5-9
11	90.00°	12-36-60-84	Level girdle meet 1-3-10-2
CROWN			
A	42.00°	96-48	Set girdle thickness
B	42.00°	12-36-60-84	Level girdle
C	42.00°	24-72	Level girdle
D	27.00°	96-48	Cut as required
E	27.00°	12-36-60-84	Level 2nd tier
F	27.00°	24-72	Level 2nd tier
G	12.00°	96-48	Cut as required
H	12.00°	12-36-60-84	Level 3rd tier
I	12.00°	24-72	Level 3rd tier
J	0.00°	Table	Cut as required to set 3rd tier & table

L/W is set at 1:25 and will be judged under "Outline of Girdle"

2021 AUSTRALIAN FACETORS' GUILD LIMITED ANNUAL FACETING COMPETITION
Section N.10.3 Superimposition R
Material - Any Coloured Synthetic Corundum
Minimum Size: 8.0mm Measured Across Shortest Axis of Plan View
59 Facets: 51 + 8; Meets: 37 (17 Pavilion + 20 Crown)

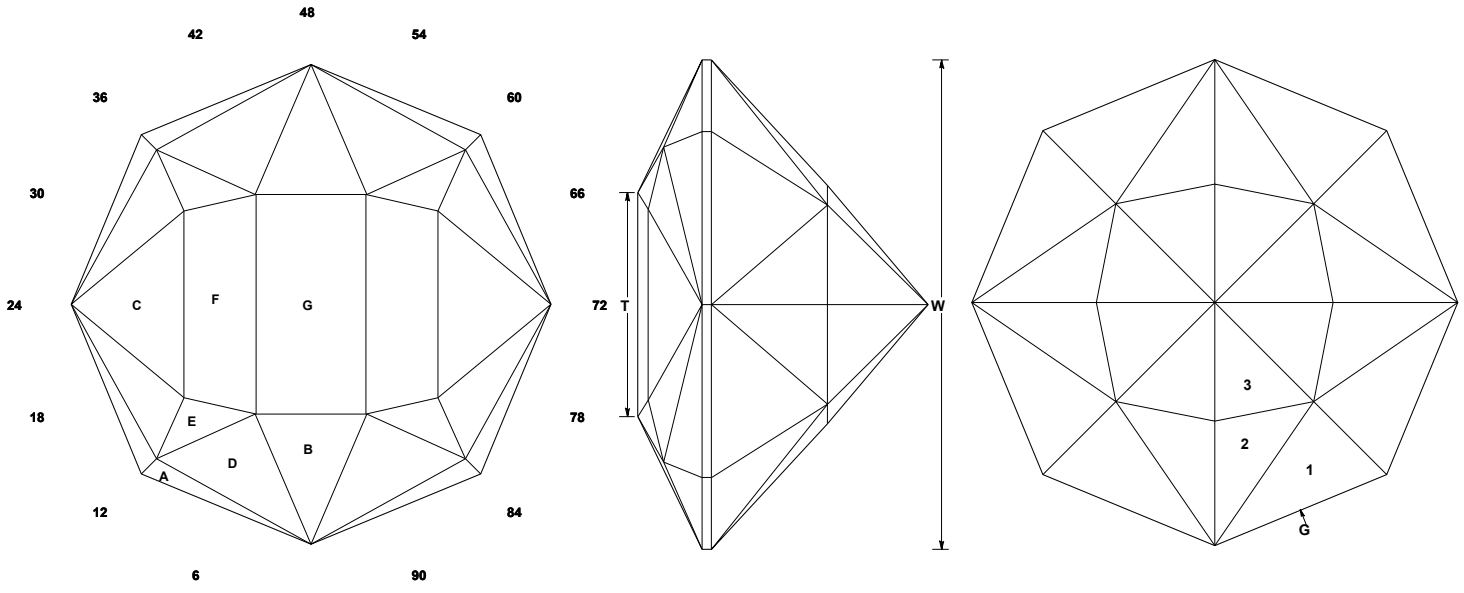

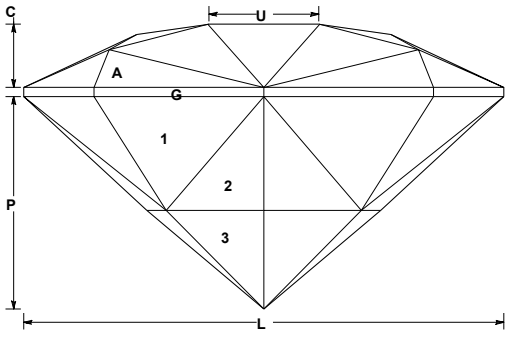

SUPERIMPOSITION R

by: Merle A Reinikka
Angles for R.I. = 1.760
51 + 8 girdles = 59 facets
8-fold radial symmetry
96 index
L/W = 1.000 T/W = 0.459 U/W = 0.231
P/W = 0.443 C/W = 0.131
Vol. /W³ = 0.192

PAVILION

1	50.03°	06-18-30-42-54-66-78-90	Cut to TCP
G	90.00°	06-18-30-42-54-66-78-90	Cut to size
2	43.03°	03-21-27-45-51-69-75-93	Meet 1 - G - G - 1
3	41.00°	03-21-27-45-51-69-75-93	Meet 2 - 1 - 1 - 2, PCP

CROWN

A	62.23°	06-18-30-42-54-66-78-90	Set girdle thickness
B	25.80°	96-48	Meet A - G - G - A
C	25.18°	24-72	Meet A - G - G - A
D	26.49°	01-23-25-47-49-71-73-95	Meet B - A - G - G - A
E	14.00°	12-36-60-84	Meet D - A - A - D
F	7.71°	24-72	Meet E - D – C
G	0.00°	Table	Meet B - D - E - F

2021 AUSTRALIAN FACETORS' GUILD LIMITED ANNUAL FACETING COMPETITION
Section N.11.4 Dilemma Sorted Variation
Material - Any Coloured Natural Quartz
Minimum Size: 8.0mm Measured Across Shortest Axis of Plan View
33 Facets: 27 + 6; Meets: 19 (7 Pavilion + 12 Crown)

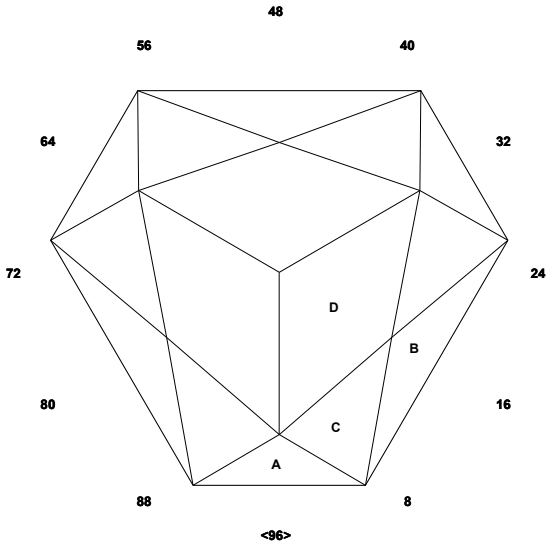

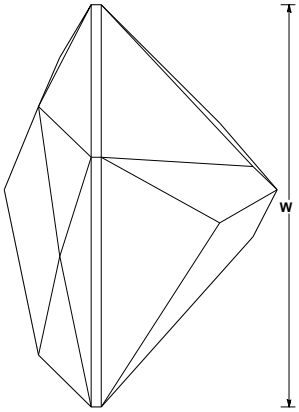

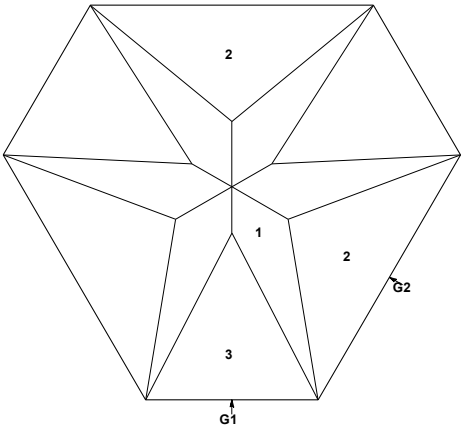

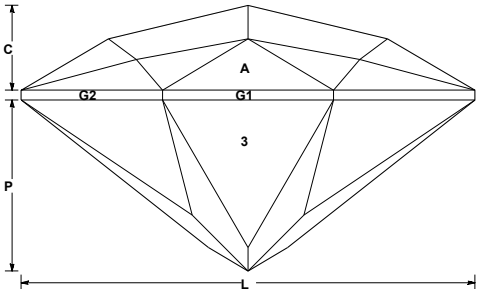

Dilemma Sorted Variation

from an original design by F.F Dunbar
Modified for 2021 AFG Annual Comp.
Angles for R.I. = 1.540
27 + 6 girdles = 33 facets
3-fold, mirror-image symmetry
96 index
L/W = 1.155
P/W = 0.437 C/W = 0.214
Vol. /W³ = 0.227

PREFORM			
PF1	45.10°	96-32-64	TCP
PF2	40.51°	16-48-80	TCP
G1	90.00°	96-32-64	Size stone
G2	90.00°	16-48-80	Level girdle
PAVILION			
1	41.00°	14-18-46-50-78-82	Cut to TCP
2	45.00°	16-48-80	Level girdle
3	41.52°	96-32-64	Level girdle
CROWN			
A	45.00°	96-32-64	Set girdle thickness
B	30.92°	16-48-80	Level girdle
C	26.96°	5-17-47-49-79-81	Meet A-B-G
D	22.38°	16-48-80	Meet A-C, C-B

2021 AUSTRALIAN FACETORS' GUILD LIMITED ANNUAL FACETING COMPETITION
Section I.8A.1 Standard Round Brilliant with Continuous Girdle
Material - Colourless Topaz
Specified Size: 8.0mm
58 Facets: 57 + 1; Meets: 41 (17 Pavilion + 24 Crown)

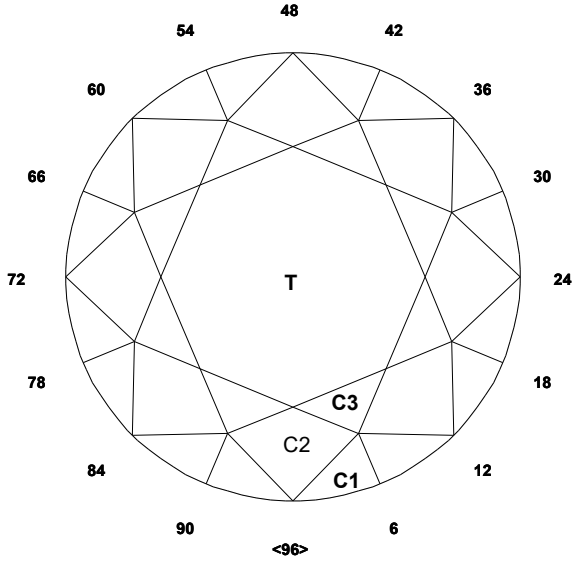

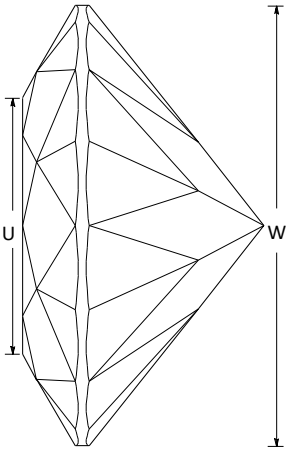

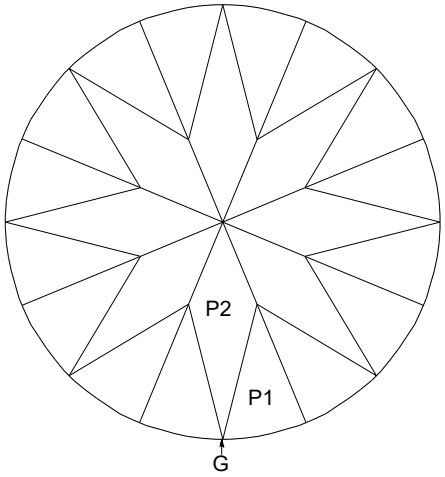

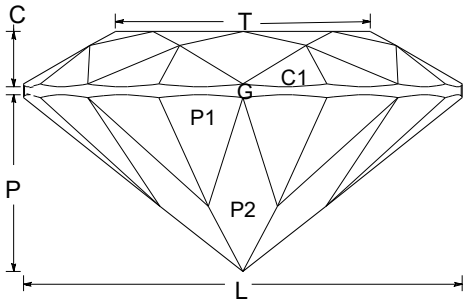

Standard Round Brilliant with Continuous Girdle

Angles for R.I. = 1.610
57 + 1 girdles = 58 facets
8-fold, mirror-image symmetry
96 index
L/W = 1.000 T/W = 0.583 U/W = 0.583
P/W = 0.404 C/W = 0.127
Vol./W³ = 0.191

PAVILION			
P1	43.00°	03-09-15-21-27-33-39-45-51-57-63-69-75-81-87-93	Form TCP
G	90.00°		Set size, Continuous girdle
P2	41.00°	96-12-24-36-48-60-72-84	Meet P1, G, form PCP
CROWN			
C1	36.00°	03-09-15-21-27-33-39-45-51-57-63-69-75-81-87-93	Set girdle thickness
C2	30.00°	96-12-24-36-48-60-72-84	Meet C1, G
C3	17.00°	06-18-30-42-54-66-78-90	Meet C1, C2
T	0.00°	Table	Meet C2, C3

2021 AUSTRALIAN FACETORS' GUILD LIMITED ANNUAL FACETING COMPETITION
Section I.10.2 Kangaroo Culet Variation
Material - Colourless Quartz
Minimum Size: 8.0mm Measured Across Shortest Axis of Plan View
63 Facets: 57 + 6; Meets: 35 (21 Pavilion + 14 Crown)

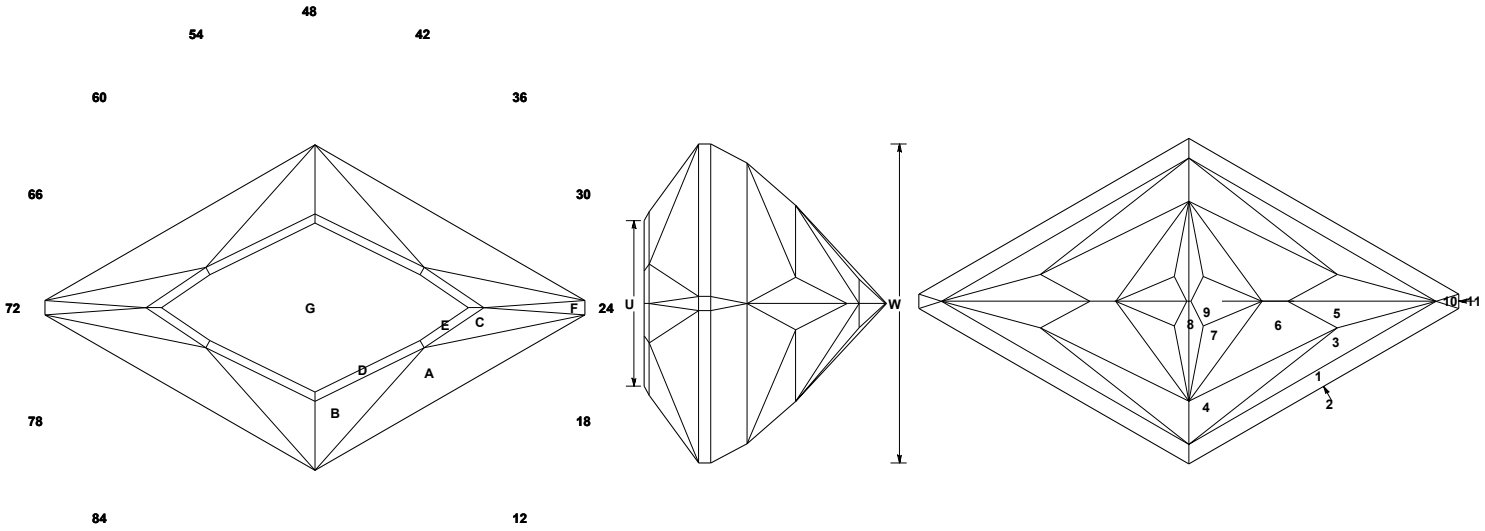

Kangaroo Culet Variation

by Paul Rivard
Modified for 2021 AFG Annual Competition
Angles for R.I. = 1.540
57 + 6 girdles = 63 facets
2-fold radial symmetry
96 index
L/W = 1.656 T/W = 0.941 U/W = 0.516
P/W = 0.548 C/W = 0.168
Vol. /W³ = 0.330

PAVILION

1	65.07°	08-40-56-88	Cut to TCP, level girdle
2	90.00°	08-40-56-88	Set size and shape
3	61.84°	08-40-56-88	Cut by eye
4	51.98°	07-41-55-89	Meet 2 - 3
5	44.00°	12-36-60-84	Meet 2 - 3
6	48.66°	07-41-55-89	Meet 3 - 4 - 5
7	45.32°	06-42-54-90	Meet 4 - 6
8	44.18°	05-43-53-91	Meet 4 - 6 - 7
9	44.00°	06-42-54-90	Meet 6 - 7
10	59.07°	24-72	Meet 2 - 3
11	90.00°	24-72	Cut tips

CROWN

A	44.00°	08-40-56-88	Set girdle thickness
B	38.94°	07-41-55-89	Meet girdle
C	38.94°	09-39-57-87	Meet A - girdle
D	28.66°	07-41-55-89	Meet A - B - C
E	28.66°	09-39-57-87	Match - D
F	26.41°	24-72	Cut tips
G	0.00°	Table	Float

2021 AUSTRALIAN FACETORS' GUILD LIMITED ANNUAL FACETING COMPETITION
Section I.10.3 Sydney Sparkler
Material - Yellow Cubic Zirconia
Minimum Size: 8.0mm Measured Across Shortest Axis of Plan View
113 Facets: 97 + 16; Meets: 65 (33 Pavilion + 32 Crown)

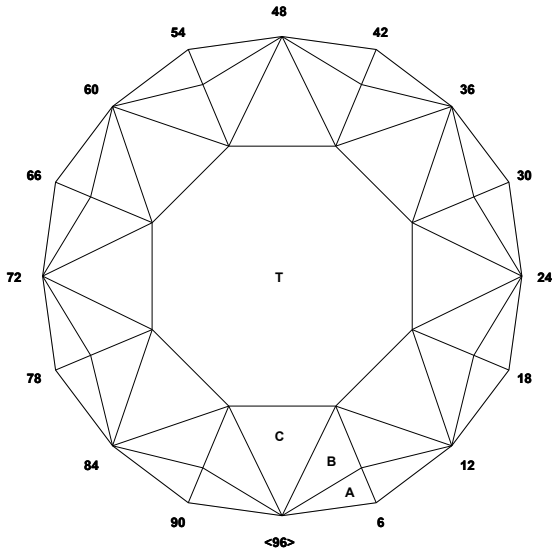

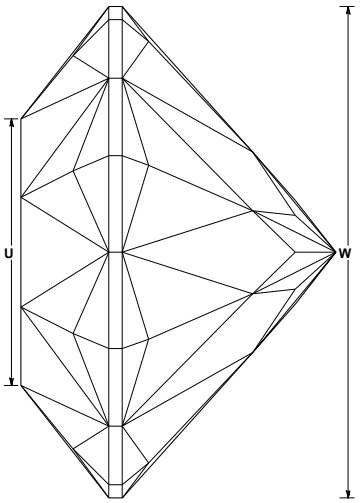

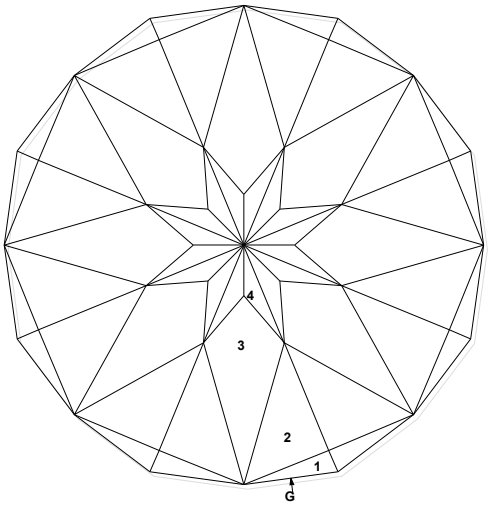

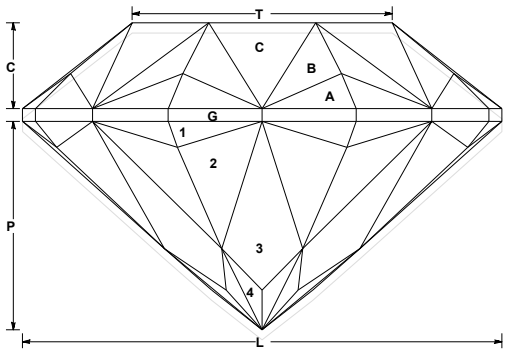

SYDNEY SPARKLER

by Frank Dickson
Angles for R.I. = 2.160
97 + 16 girdles = 113 facets
8-fold, mirror-image symmetry
96 index
L/W = 1.000 T/W = 0.543 U/W = 0.543
P/W = 0.435 C/W = 0.179
Vol. /W³ = 0.231

PAVILION

1	49.07°	02-10-14-22-26-34-38-46-50-58-62-70-74-82-86-94	Cut to TCP
G	90.00°	02-10-14-22-26-34-38-46-50-58-62-70-74-82-86-94	Set size
2	42.54°	01-11-13-23-25-35-37-47-49-59-61-71-73-83-85-95	Meet 1 - 2 - G
3	41.94°	96-12-24-36-48-60-72-84	Meet 1 - 2 - 3 - G
4	38.00°	03-09-15-21-27-33-39-45-51-57-63-69-75-81-87-93	Meet 4 - 3 - 3 - 4, form PCP

CROWN

A	43.00°	02-10-14-22-26-34-38-46-50-58-62-70-74-82-86-94	Set girdle thickness
B	39.13°	01-11-13-23-25-35-37-47-49-59-61-71-73-83-85-95	Meet A - A - G
C	38.16°	96-12-24-36-48-60-72-84	Meet A - B - B - A - G
T	0.00°		Table

2021 AUSTRALIAN FACETORS' GUILD LIMITED ANNUAL FACETING COMPETITION
Section I.11.4 Apex Crown Variation
Material - Any Coloured Cubic Zirconia
Minimum Size: 8.0mm Measured Across Shortest Axis of Plan View
72 Facets: 56 + 16; Meets: 46 (21 Pavilion + 25 Crown)

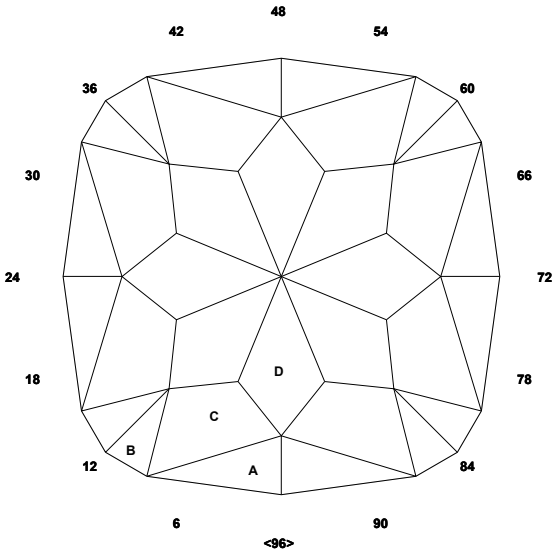

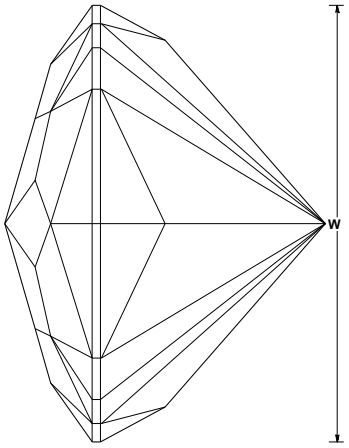

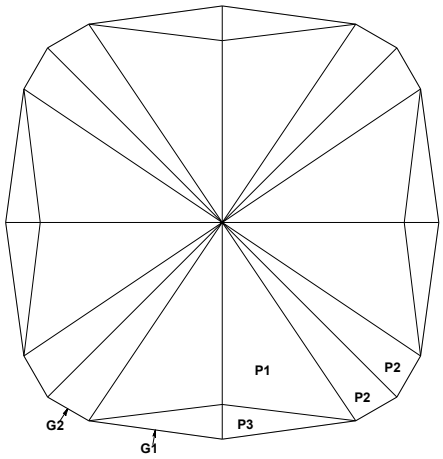

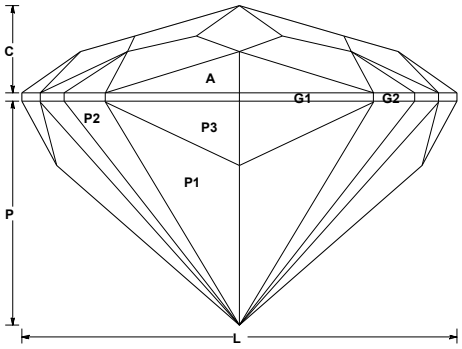

Apex Crown Variation

by Long & Steele
Modified for 2021 AFG Annual Competition
Angles for R.I. = 2.160
56 + 16 girdles = 72 facets
8-fold, mirror-image symmetry
96 index
L/W = 1.000
P/W = 0.515 C/W = 0.200
Vol./W³ = 0.252

PAVILION			
P1	43.50°	06-18-30-42-54-66-78-90	Cut to PCP
P2	43.00°	08-16-32-40-56-64-80-88	Cut to PCP meet P1
P3	61.71°	02-22-26-46-50-70-74-94	Meet P1 - P2 - girdle
G1	90.00°	02-22-26-46-50-70-74-94	Meet P1 - P2 - girdle and level girdle
G2	90.00°	08-16-32-40-56-64-80-88	Level girdle
CROWN			
A	35.60°	02-22-26-46-50-70-74-94	Set girdle thickness
B	25.62°	08-16-32-40-56-64-80-88	Level girdle
C	25.00°	06-18-30-42-54-66-78-90	Meet A - B - girdle
D	16.00°	96-12-24-36-48-60-72-84	Meet A - C

2021 AUSTRALIAN FACETORS' GUILD LIMITED ANNUAL FACETING COMPETITION
Section O.10.1 Quadrion
Material - Any Coloured Synthetic Corundum
Specified Size: 10.0mm measured across L & W
81 Facets: 69 + 12; Meets: 45 (25 Pavilion + 20 Crown)

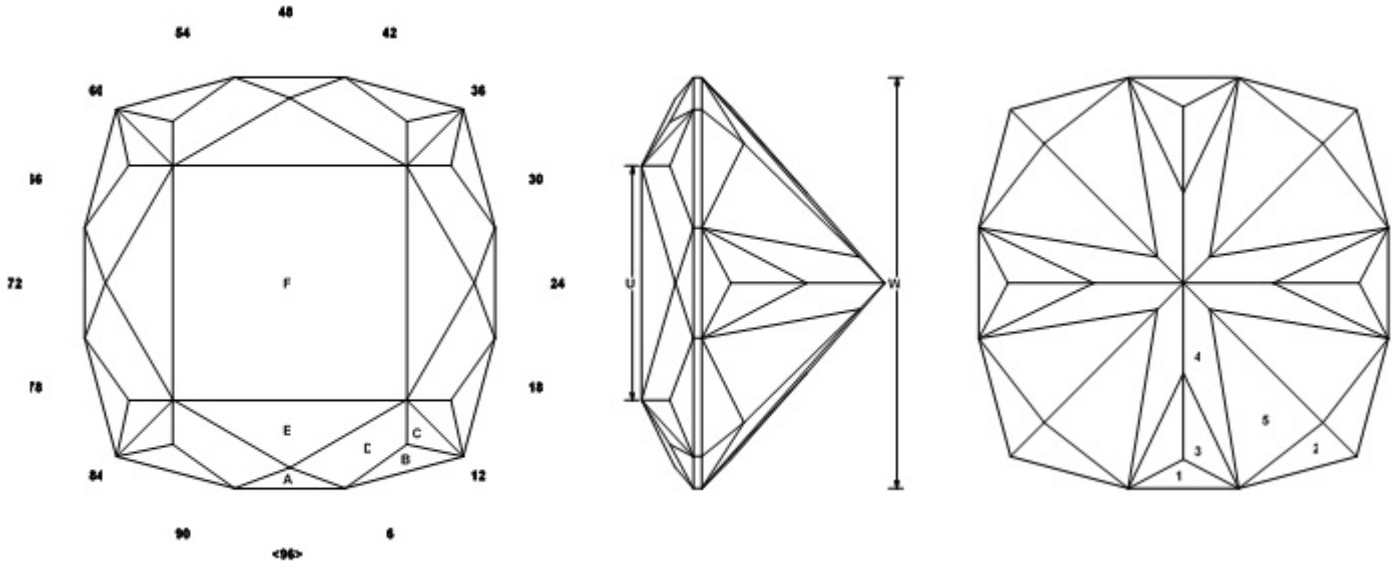

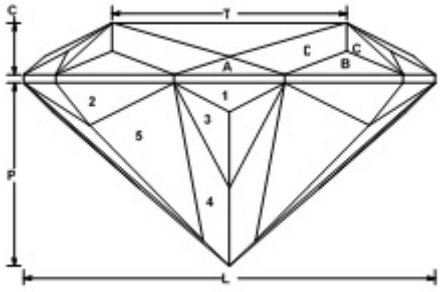

Quadrion

by Robert Hall
Modified to 96 Index for 2021 AFG Competition
Angles for R.I. = 1.760
69 + 12 girdles = 81 facets
4-fold, mirror-image symmetry
96 index
L/W = 1.000 T/W = 0.495 U/W = 0.495
P/W = 0.449 C/W = 0.150
Vol./W³ = 0.234

PREFORM			
PF1	42.00°	96-24-48-72	Cut to TCP
PF2	41.00°	04-20-28-44-52-68-76-92	Meet TCP
G1	90.00°	96-24-48-72	Set size
G2	90.00°	04-20-28-44-52-68-76-92	Level girdle
PAVILION			
1	45.00°	96-24-48-72	Cut to TCP
2	45.00°	04-20-28-44-52-68-76-92	Level girdle
3	41.68°	01-23-25-47-49-71-73-95	Meet 1-2-girdle
4	41.00°	02-22-26-46-50-70-74-94	Meet 1-2-3-girdle
5	41.00°	03-21-27-45-51-69-75-93	Meet 1-2-3-4-girdle

CROWN			
A	41.00°	96-24-48-72	Set girdle thickness
B	41.00°	04-20-28-44-52-68-76-92	Level girdle
C	34.88°	06-18-30-42-54-66-78-90	Meet B-B-girdle
D	33.00°	02-22-26-46-50-70-74-94	Meet A-B-girdle
E	26.50°	96-24-48-72	Meet D-A-D
F	0.00°	Table	Meet E-D-C-C-D-E

2021 AUSTRALIAN FACETORS' GUILD LIMITED ANNUAL FACETING COMPETITION
Section O.10.2 Superflash #1
Material - Colourless Quartz
81 Facets: 73 + 8; Meets: 55 (23 Pavilion + 32 Crown)

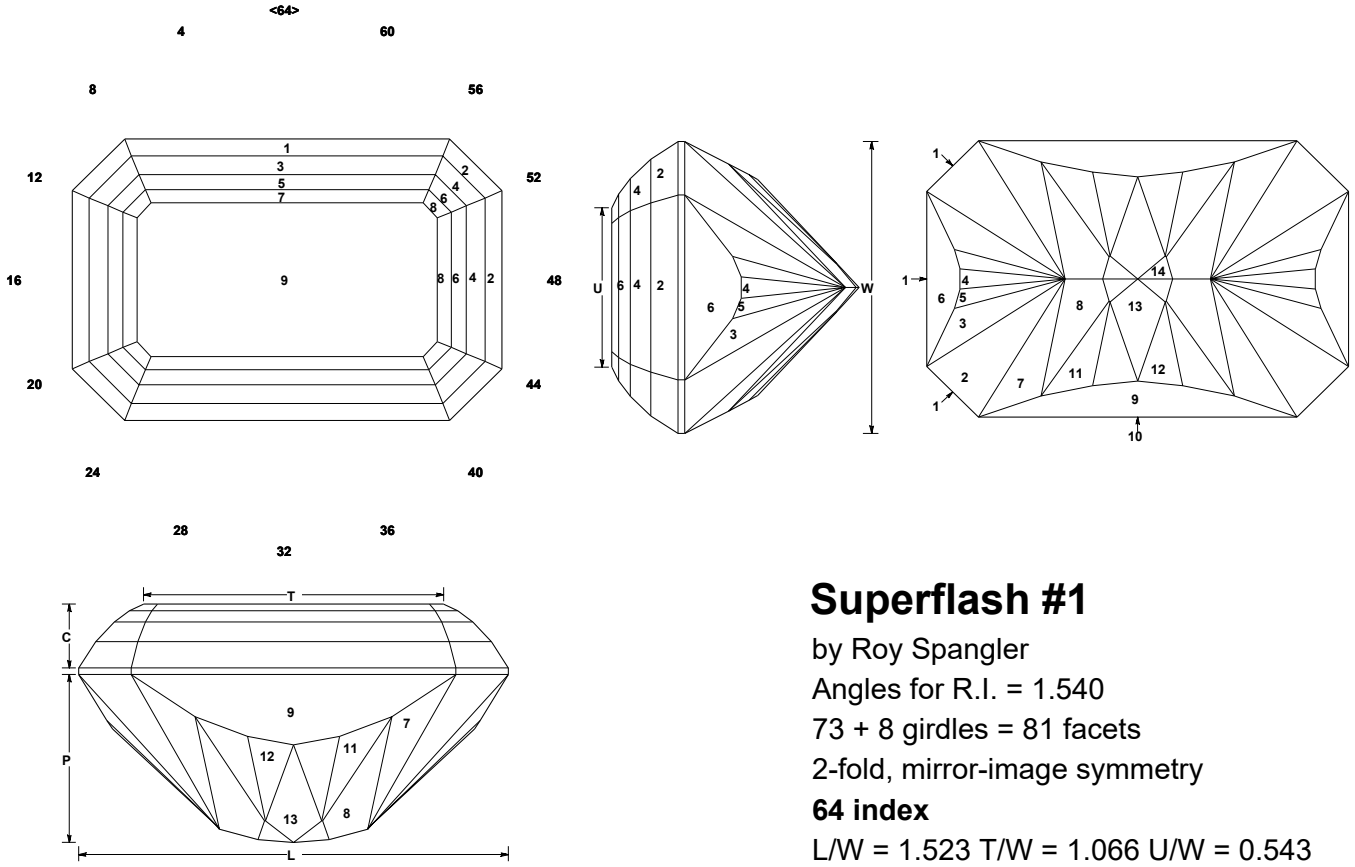

Superflash #1

by Roy Spangler
Angles for R.I. = 1.540
73 + 8 girdles = 81 facets
2-fold, mirror-image symmetry
64 index
L/W = 1.523 T/W = 1.066 U/W = 0.543
P/W = 0.595 C/W = 0.229
Vol. /W³ = 0.642

PAVILION

1	90.00°	08-16-24-40-48-56	Cut ECED to Length
2	43.60°	08-24-40-56	Set girdle position
3	43.30°	12-20-44-52	Meet 1-1-2
4	43.07°	16-48	Meet 2-3-3-2
5	43.10°	14-18-46-50	Meet 2-3-3-2
6	58.30°	16-48	Meet 1-2-3, level girdle
7	43.30°	04-28-36-60	Meet 2-3-4-5
8	42.90°	03-29-35-61	Meet 2-3-4-5-7
9	62.60°	64-32	Level girdle
10	90.00°	64-32	Meet 1-2-7
11	44.00°	02-30-34-62	Meet 7-8-10
12	44.14°	01-31-33-63	Make 11 & 12 equal segments
13	43.00°	64-32	Meet 12-10-12
14	39.96°	01-31-33-63	Meet 8-11-12-13

CROWN

1	57.00°	64-32	Set girdle thickness
2	57.00°	08-16-24-40-48-56	Level girdle
3	47.00°	64-32	Cut four equal tiers as viewed from above
4	47.00°	08-16-24-40-48-56	
5	37.00°	64-32	
6	37.00°	08-16-24-40-48-56	
7	27.00°	64-32	
8	27.00°	08-16-24-40-48-56	
9	0.00°	Table	

2021 AUSTRALIAN FACETORS' GUILD LIMITED ANNUAL FACETING COMPETITION
Section O.10.3 Twinkle Triangle
Material - Colourless Cubic Zirconia
127 Facets: 106 + 21; Meets: 86 (42 Pavilion + 44 Crown)

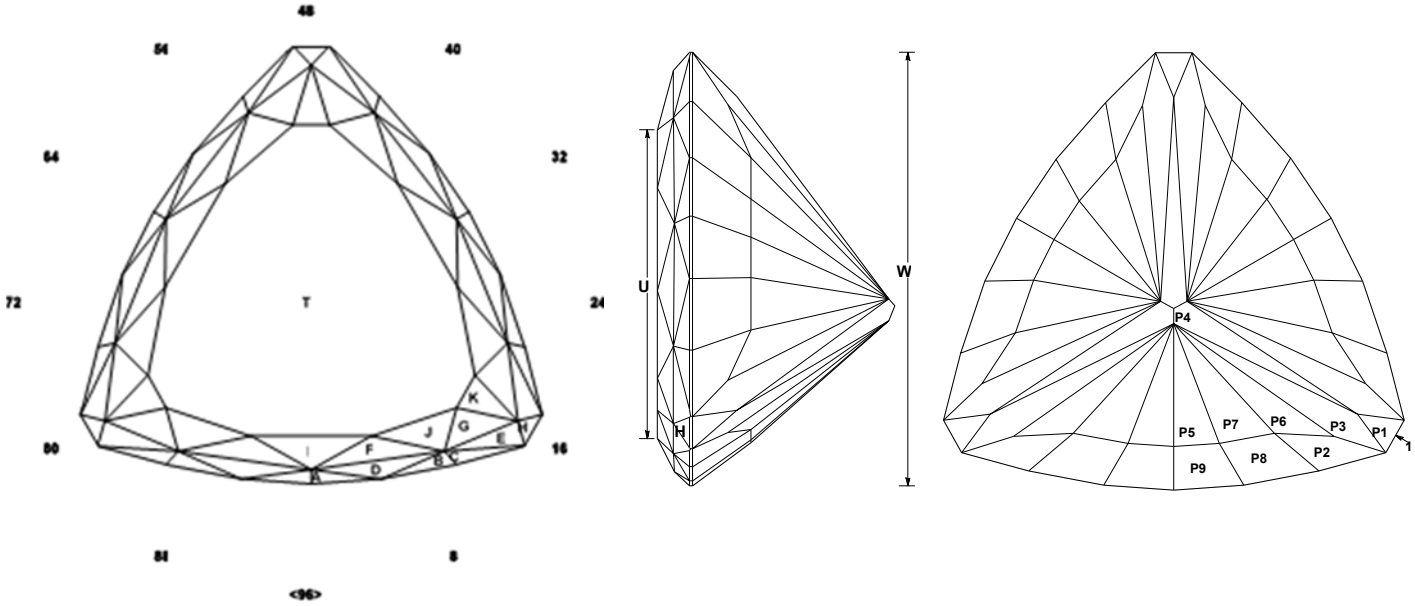

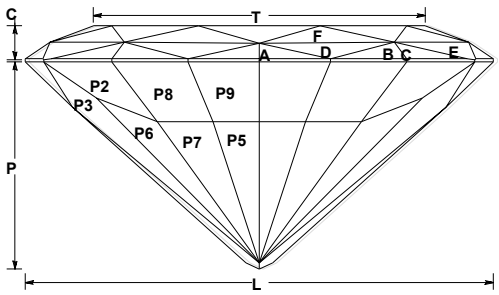

TWINKLE TRIANGLE

By Henk Prins 2016
Angles for R.I. = 2.160
106 + 21 girdles = 127 facets
3-fold, mirror-image symmetry
96 index
L/W = 1.056 T/W = 0.749 U/W = 0.714
P/W = 0.466 C/W = 0.077
Vol. /W³ = 0.168

PREFORM

PF1	45.87°	01-31-33-63-65-95	Cut to centrepoint
PF2	44.92°	03-29-35-61-67-93	Cut to centrepoint
PF3	43.89°	04-28-36-60-68-92	Cut to centrepoint
PF4	36.13°	16-48-80	Cut to centrepoint
G1	90.00°	01-31-33-63-65-95	Set size
G2	90.00°	03-29-35-61-67-93	Level girdle
G3	90.00°	04-28-36-60-68-92	Level girdle
G4	90.00°	16-48-80	Level girdle

PAVILION

P1	45.20°	16-48-80	Set girdle position
P2	50.73°	04-28-36-60-68-92	Meet P1-G3-G4
P3	43.36°	07-25-39-57-71-89	Meet P1-P2 G3-G4
P4	36.94°	16-48-80	Meet P1-P3, PCP
P5	48.56°	01-31-33-63-65-95	Meet P4-P4
P6	45.73°	05-27-37-59-69-91	Meet P3-P4-P5
P7	47.68°	03-29-35-61-67-93	Meet P3-P4-P5-P6
P8	52.09°	03-29-35-61-67-93	Level girdle, meet P2-P7-P6
P9	53.64°	01-31-33-63-65-95	Level girdle, meet P5-P7-P8

CROWN

A	48.64°	01-31-33-63-65-95	Set girdle width
B	47.85°	03-29-35-61-67-93	Level girdle
C	46.79°	04-28-36-60-68-92	Level girdle, also pre-cut H at same angle to level Girdle
D	40.64°	02-30-34-62-66-94	Meet A-B at girdle
E	32.98°	06-26-38-58-70-90	Meet C-H at girdle
F	33.99°	02-30-34-62-66-94	Meet A-B & B-C
G	24.41°	06-26-38-58-70-90	Meet B-C & E-H
H	42.74°	16-48-80	Recut to meet girdle & E-G
I	27.15°	96-32-64	Meet A-D-F
J	23.40°	05-27-37-59-69-91	Meet F-D-B-C-G-E
K	15.28°	16-48-80	Meet G-E-H
T	0.00°	Table	Meet G & F

2021 AUSTRALIAN FACETORS' GUILD LIMITED ANNUAL FACETING COMPETITION
Section O.11.4 Triapex
Material - Any Coloured Synthetic Spinel
Minimum Size: 8.0mm Measured Across Shortest Axis of Plan View
93 Facets: 75 + 18; Meets: 70 (36 Pavilion + 34 Crown)

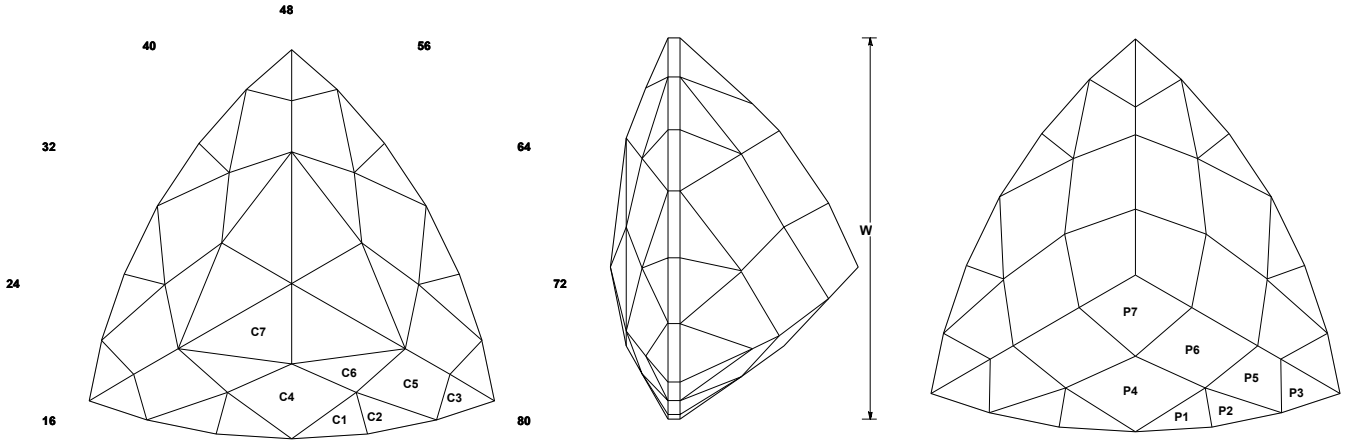

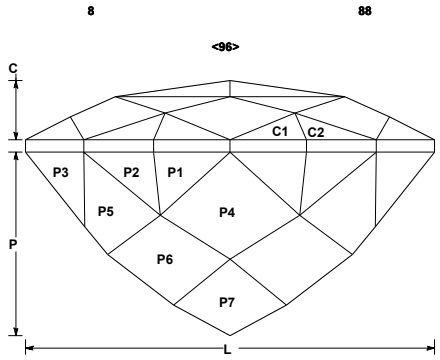

TRIAPEX

Robert Long
Angles for R.I. = 1.720
75 + 18 girdles = 93 facets
3-fold, mirror-image symmetry
96 index
L/W = 1.041
P/W = 0.467 C/W = 0.151
Vol. /W³ = 0.196

PREFORM			
PF1	39.00°	03-29-35-61-67-93	
PF2	40.28°	01-31-33-63-65-95	
PF3	36.75°	05-27-37-59-69-91	
PF4	90.00°	05-27-37-59-69-91	
PF5	90.00°	03-29-35-61-67-93	
PF6	90.00°	01-31-33-63-65-95	
PAVILION			
P1	57.92°	01-31-33-63-65-95	Set girdle position
P2	57.81°	03-29-35-61-67-93	Level Girdle
P3	55.50°	05-27-37-59-69-91	Level Girdle
P4	55.00°	96-32-64	Meet P1 - P1 - G1
P5	55.00°	04-28-36-60-68-92	Meet P2 - P3 - G1
P6	48.00°	02-30-34-62-66-94	Meet P1 - P2 - P4 - P5
P7	43.00°	96-32-64	Meet P6 - P4 - P6
CROWN			
C1	32.49°	01-31-33-63-65-95	Set girdle thickness
C2	32.04°	03-29-35-61-67-93	Level girdle
C3	30.45°	05-27-37-59-69-91	Level girdle
C4	30.00°	96-32-64	Meet C1 - C1 - G1
C5	29.39°	04-28-36-60-68-92	Meet C2 - C3 - G1
C6	24.18°	02-30-34-62-66-94	Meet C1 - C2 - C4 - C5
C7	11.20°	02-30-34-62-66-94	Meet C6 - C4 - C6

2021 AUSTRALIAN FACETORS' GUILD LIMITED ANNUAL FACETING COMPETITION
Section O.10.5 Open Challenge
Any Material, Any Colour
MINIMUM SIZE 10.0mm Measured across <u>longest</u> axis of plan view

- **The competitor must supply a fully rendered cutting diagram with instructions and submit with cut stone.**

- **The stone will be judged as per section 10 but will only account for 90% of the marks. As per Judging Sheet O.10.5 (a) on page 21.**

- **The other 10% of the marks will be from the diagram and cutting instructions. As per Judging Sheet O.10.5 (b) on page 22.**

- **See Special Condition K on page 4 for guidance.**

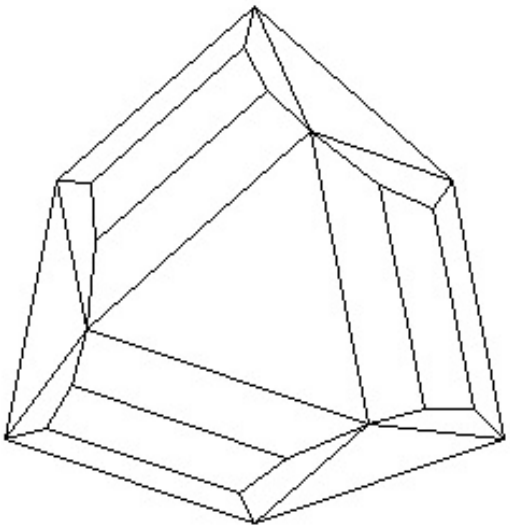

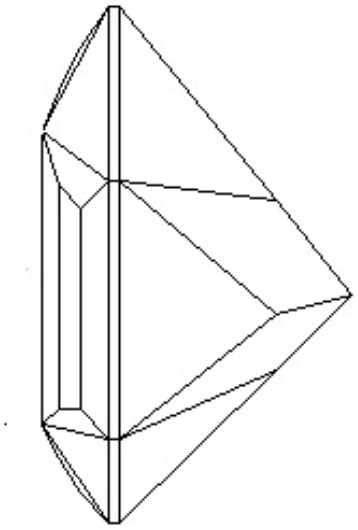

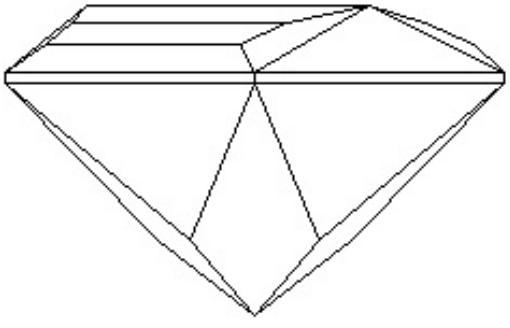

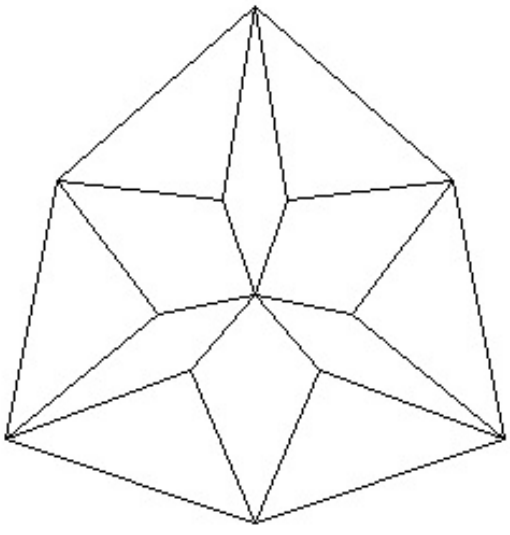

AUSTRALIAN FACETORS' GUILD LIMITED
2021 ANNUAL FACETING COMPETITION

Section: O.10.5 (a) **Entry No.**

Design: Open Challenge

Material: Any Material, Any Colour

Minimum Size: 10.0mm Measured Across Longest Axis of Plan View

Size: _____ **Height:** _____

Girdle Thickness: Calculated _____ **Actual:** _____

	Crown	Girdle	Pav.	Total
No of Meets:	9		7	16
No of Facets:	19	6	12	37

Defects	
Ref. Point	●
Meet OUT	○
Scratch	/
Chip	△
Grind Mark	V
Facet Not True	⊘

WHOLE OF STONE	Judge ( )		SCORE	Committee
Diagram		10		Avg. ( )
Visual Effect		5		
Outline of Girdle		3		
Table Parallel to Girdle Plane		1		
Flaws		1		
Foreign Surface Material		1		
CROWN				
Meets "IN"	[/9]	10		
Facets Uniform	[/19]	10		
Facet Edges Sharp		2		
Facet Surfaces True		3		
Scratches		4		
Polish		4		
Chips		2		
GIRDLE				
Facets Uniform	[/6]	2		
Facet Surfaces True		1		
Scratches		1		
Polish		2		
Girdle Thickness		3		
PAVILION				
Meets "IN"	[/7]	10		
Facets Uniform	[/12]	10		
Facet Edges Sharp		2		
Facet Surfaces True		3		
Scratches		4		
Polish		4		
Chips		2		
	Total Possible	100		

Diagram Scoring: Compared to Original from Committee. Committee to appraise Diagram after Judge appraisal. Committee to calculate average score from Committee Points and Judges points

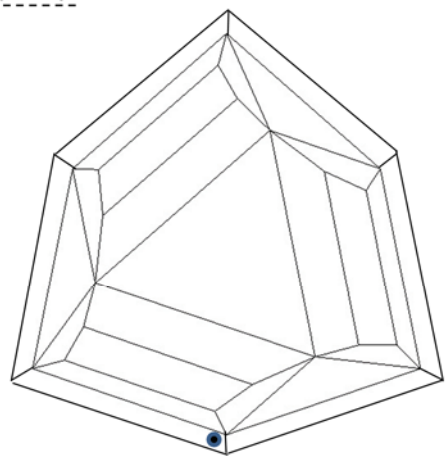

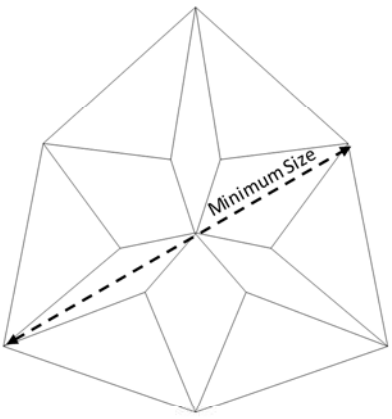

Judge Comments: _____

Judge Signature: _____ Date: _____

Sheet Check ☐ Calc. Check ☐ Final Check ☐

SECTION O.10.5 (b) - CUTTING DIAGRAM JUDGING SHEET

Committee/ Stone Judge _____

Entry No. _____

ITEM	MAXIMUM POINTS	SCORE	FEATURE
Headers	1.0		Headers must name the cut and specify the R.I., No. of Facets, No of Meetpoints, Fold, Symmetry, Index Gear used L/W, T/W, U/W,P/W, C/W, Vol./W³
Pavilion	0.5		Cutting Sequence No.
	0.5		Angles
	0.5		Indices
	0.5		Cutting Instructions
Crown	0.5		Cutting Sequence No.
	0.5		Angles
	0.5		Indices
	0.5		Cutting Instructions
Facet Shape	5.0		The facet shapes must be consistent with the 4 views supplied
	10.0		

Judge Comments _____

_____

_____

_____

_____

Judge Signature _____ Date _____

Australian Facetors' Guild Judging Sheet 2021, Not to be used for any other Section or Competion outside of the AFG

2021 AUSTRALIAN FACETORS' GUILD LIMITED ANNUAL COMPETITION
Open Section O.10.6 Happy Birthday Concave Variation
Material - Any Coloured Cubic Zirconia
Minimum Size: 10.0mm Measured Across Shortest Axis of Plan View
Girdle Thickness Measured at Girdle 5
69 Facets: 45 + 24; Meets: 49 (Crown - 24, Pavilion - 25)

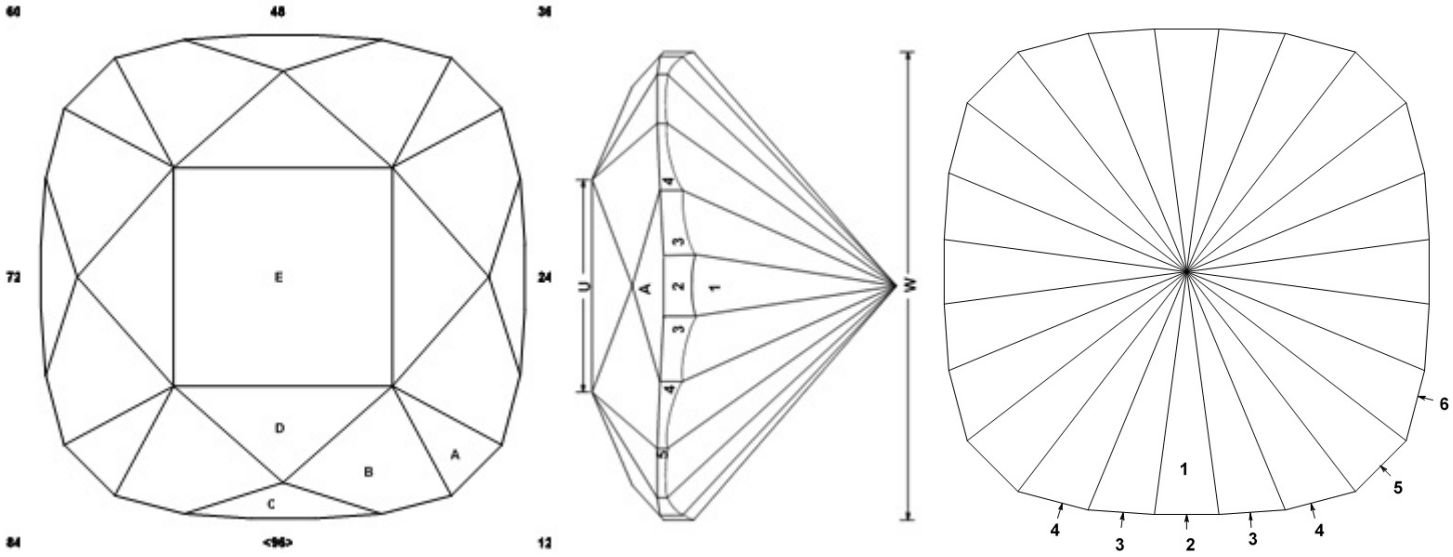

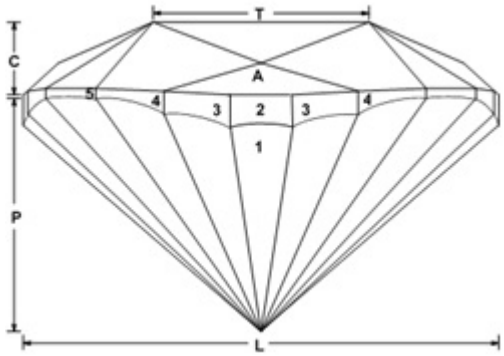

Happy Birthday Concave Variation

Derived from an original Flat facet design by Claude Marc-Aurele
Modified for Concave by Paul Sabolta 2020
Angles for R.I. = 2.160
45 + 24 girdles = 69 facets
4-fold, mirror-image symmetry
96 index
L/W = 1.000 T/W = 0.453 U/W = 0.453
P/W = 0.492 C/W = 0.153
Vol. /W³ = 0.254

PAVILION PRE-FORM FLAT FACET

1	41.00°	96-04-08-12-16-20-24-28-32-36-40-44-48-52-56-60-64-68-72-76-80-84-88-92	Cut PCP
2	90.00°	96-24-48-72	Set size
3	90.00°	01-23-25-47-49-71-73-95	Girdle 3
4	90.00°	04-44-52-92	Girdle 4
5	90.00°	12-36-60-84	Girdle 5
6	90.00°	20-28-68-76	Girdle 6

PAVILION CONCAVE

1	41.00°	96-04-08-12-16-20-24-28-32-36-40-44-48-52-56-60-64-68-72-76-80-84-88-92	Cut to size and to maintain girdle shape & meetpoints using Mandrel of choice

CROWN

A	29.58°	12-36-60-84	Set girdle thickness at Girdle 5
B	29.58°	03-21-27-45-51-69-75-93	Meet at A, 4, 5
C	42.00°	96-24-48-72	Meet B, 3, 4
D	23.31°	96-24-48-72	Meet at A-B, B-C
E	0.00°	Table	Meet at A, B, D

AUSTRALIAN FACETORS' GUILD LIMITED
2021 ANNUAL FACETING COMPETITION

Section: N.8B.1 **Entry No.**

Design: Std. Round Brilliant with Faceted Girdle

Material: Any Naturally Coloured Topaz

Minimum Size: 6.0mm Across Shortest Axis of Plan View

Size: _____ **Height:** _____

Girdle Thickness: Calculated _____ **Actual:** _____

	Crown	Girdle	Pav.	Total
No of Meets:	32		25	57
No of Facets:	33	16	24	73

Defects	
Ref. Point	●
Meet OUT	○
Scratch	/
Chip	△
Grind Mark	V
Facet Not True	⊘

		SCORE	
WHOLE OF STONE			
Visual Effect	6		
Outline of Girdle	5		
Table Parallel to Girdle Plane	3		
Flaws	4		
Foreign Surface Material	1		
CROWN			
Meets "IN" [/32]	10		
Facets Uniform [/33]	10		
Facet Edges Sharp	2		
Facet Surfaces True	3		
Scratches	4		
Polish	4		
Chips	2		
GIRDLE			
Facets Uniform [/16]	4		
Facet Surfaces True	1		
Scratches	1		
Polish	2		
Girdle Thickness	3		
PAVILION			
Meets "IN" [/25]	10		
Facets Uniform [/24]	10		
Facet Edges Sharp	2		
Facet Surfaces True	3		
Scratches	4		
Polish	4		
Chips	2		
Total Possible	100		

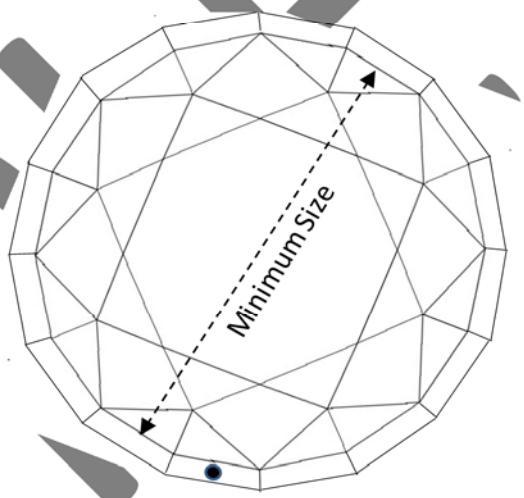

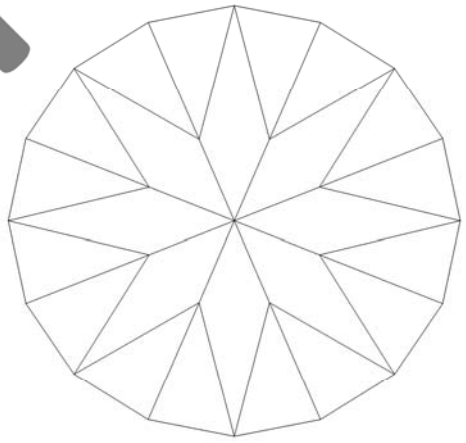

Judge Comments: _____

Judge Signature: _____ Date: _____

Sheet Check ☐ Calc. Check ☐ Final Check ☐

Australian Facetors' Guild Limited Judging Sheet. Not to be used for any other Section or Competition outside the AFG Version 2/20

SAMPLE